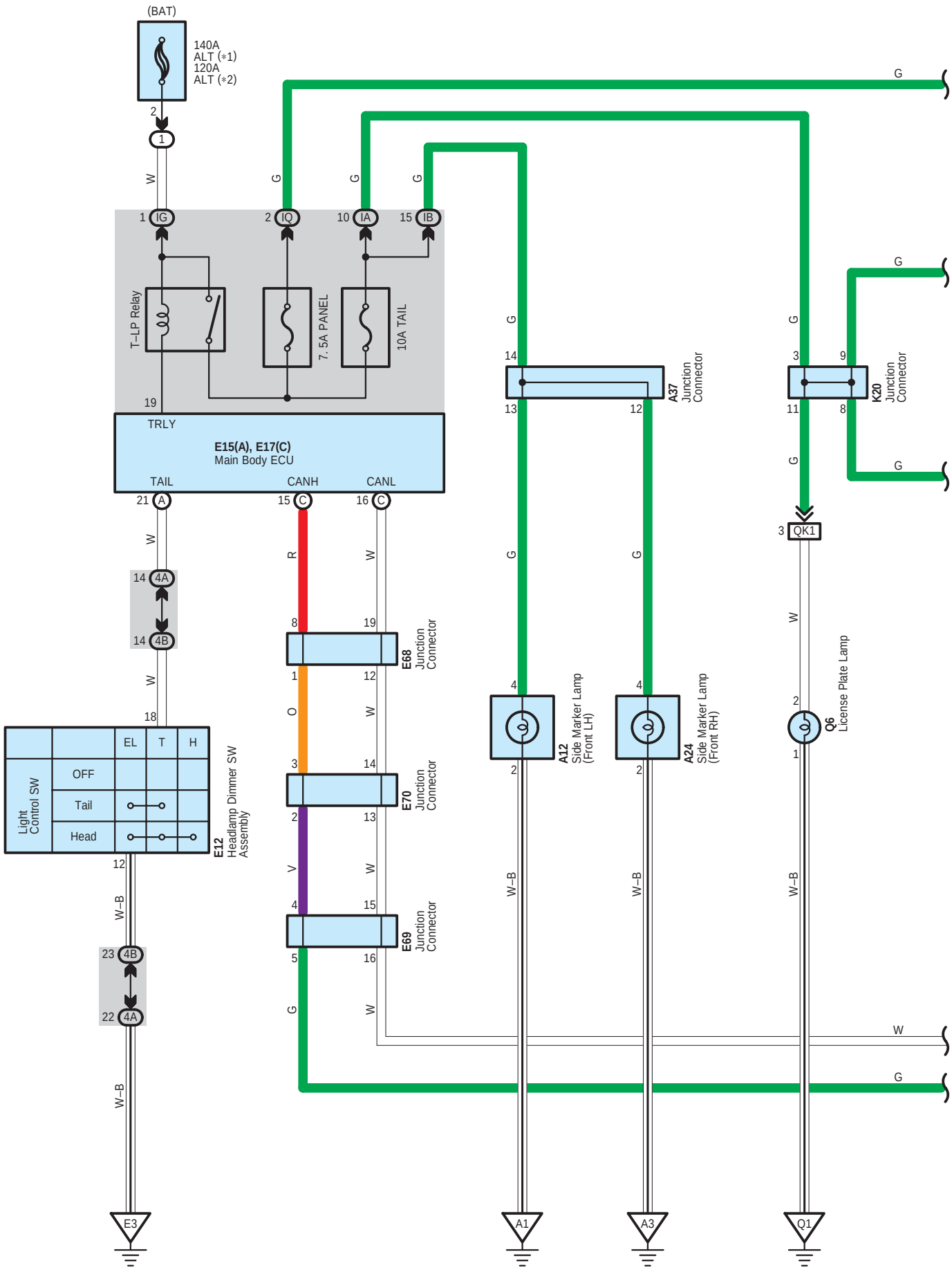
(BAT)
140A
ALT (*1)
120A
ALT (*2)
T–LP Relay
7. 5A PANEL
10A TAIL
TRLY
E15(A), E17(C)
Main Body ECU
TAIL
CANH
CANL
A37
Junction
Connector
K20
Junction
Connector
QK1
E68
Junction
Connector
E70
Junction
Connector
E69
Junction
Connector
A12
Side Marker Lamp
(Front LH)
A24
Side Marker Lamp
(Front RH)
Q6
License Plate Lamp
Light
Control SW
OFF
Tail
Head
EL
T
H
E12
Headlamp Dimmer SW
Assembly
E3
A1
A3
Q1

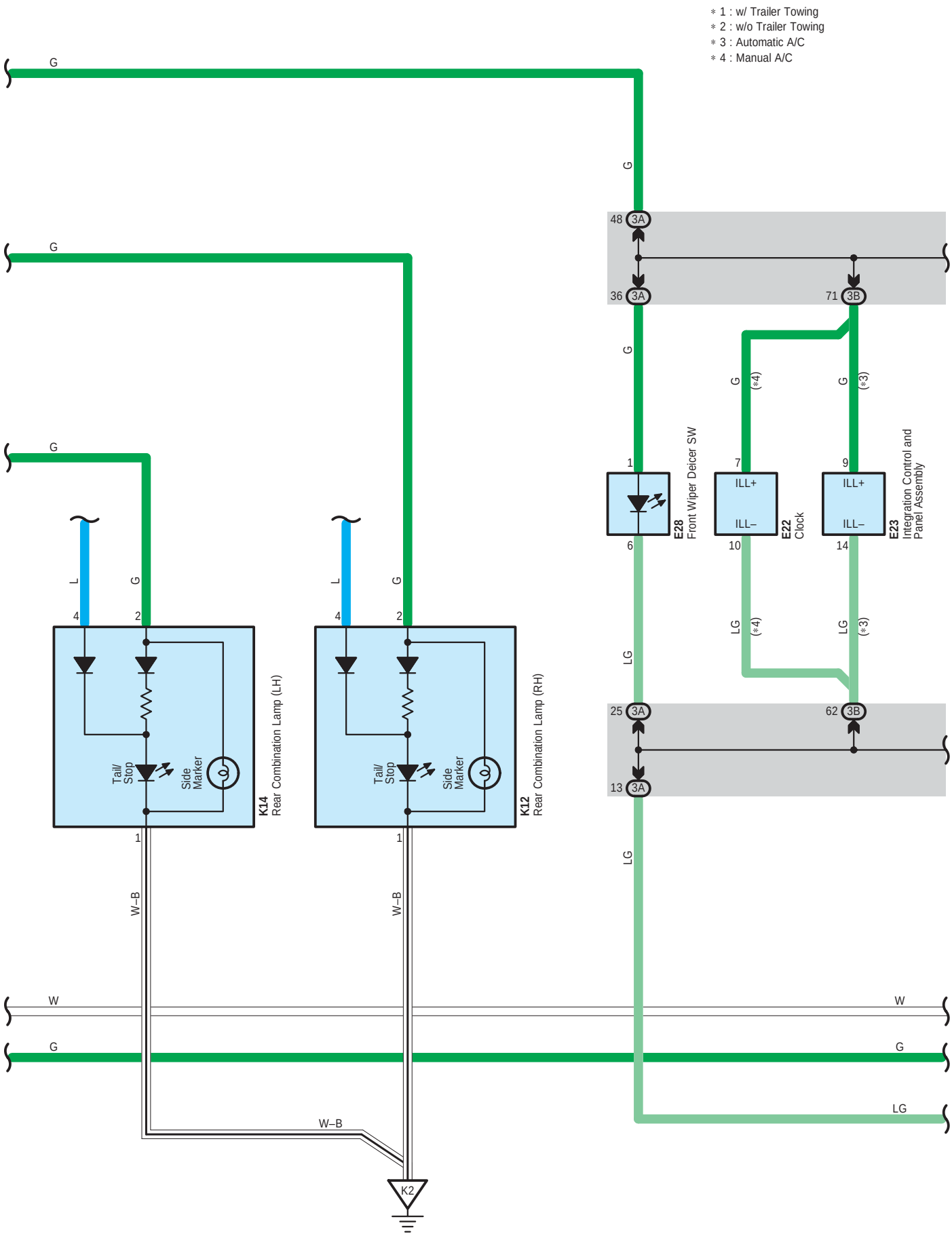
* 1 : w/ Trailer Towing
* 2 : w/o Trailer Towing
* 3 : Automatic A/C
* 4 : Manual A/C
G
48 3A
36 3A
71 3B
1
6
E28
Front Wiper Deicer SW
7
10
ILL+
ILL–
E22
Clock
9
14
ILL+
ILL–
E23
Integration Control and Panel Assembly
(*4)
(*3)
LG
25 3A
13 3A
62 3B
L
4
2
1
Tail/ Stop
Side Marker
K14
Rear Combination Lamp (LH)
K12
Rear Combination Lamp (RH)
W–B
W
K2

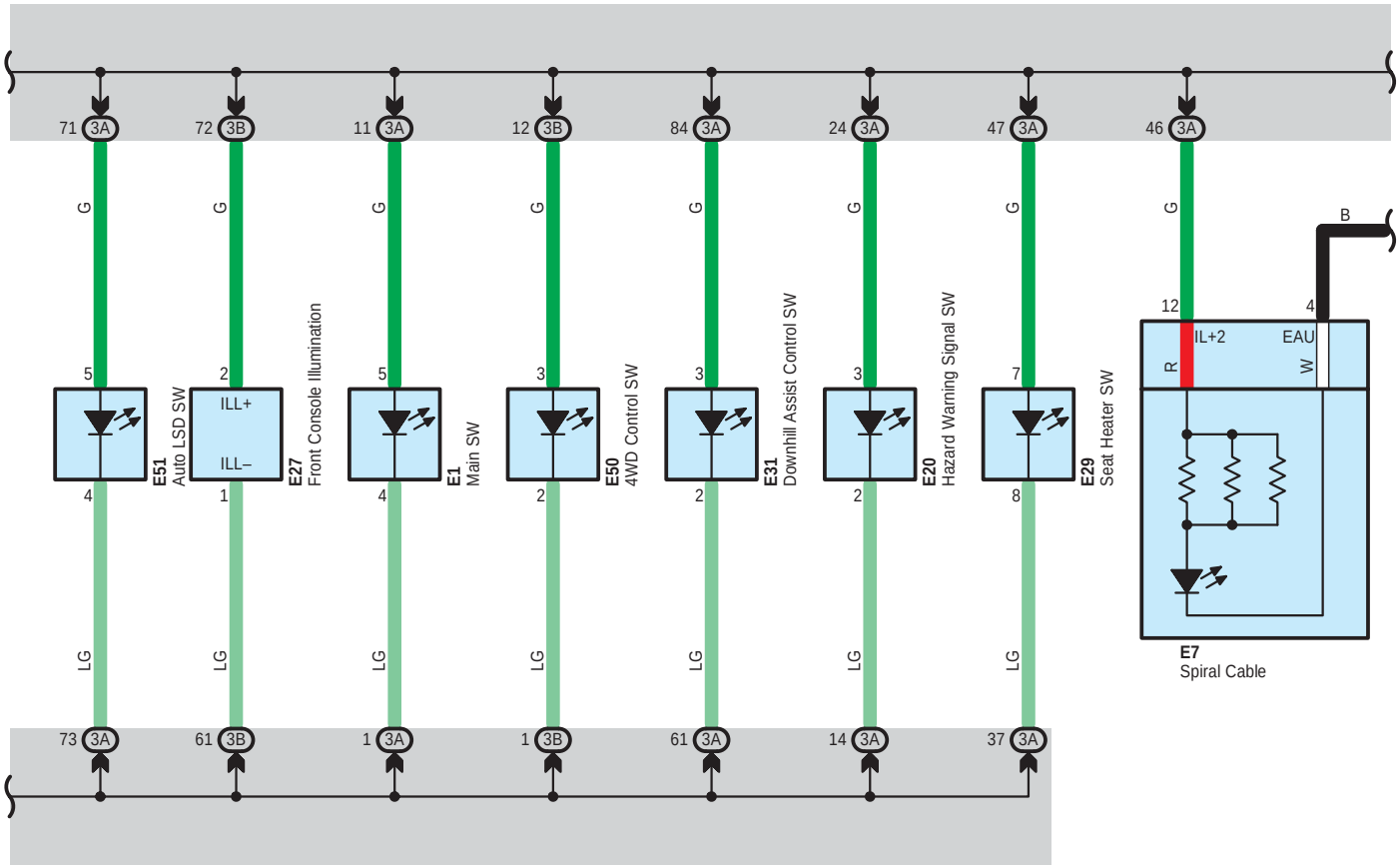
71 3A
72 3B
11 3A
12 3B
84 3A
24 3A
47 3A
46 3A
G
B
5
2
5
3
3
3
7
12
4
IL+2
EAU
R
W
ILL+
ILL–
E51
Auto LSD SW
E27
Front Console Illumination
E1
Main SW
E50
4WD Control SW
E31
Downhill Assist Control SW
E20
Hazard Warning Signal SW
E29
Seat Heater SW
E7
Spiral Cable
4
1
4
2
2
2
8
LG
73 3A
61 3B
1 3A
1 3B
61 3A
14 3A
37 3A

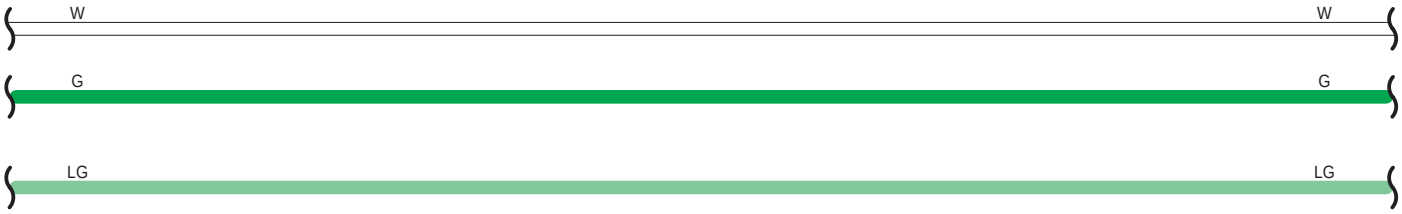
W
W
G
G
LG
LG

∗ 5 : Audio System (JBL)
∗ 6 : Audio System (Except JBL)

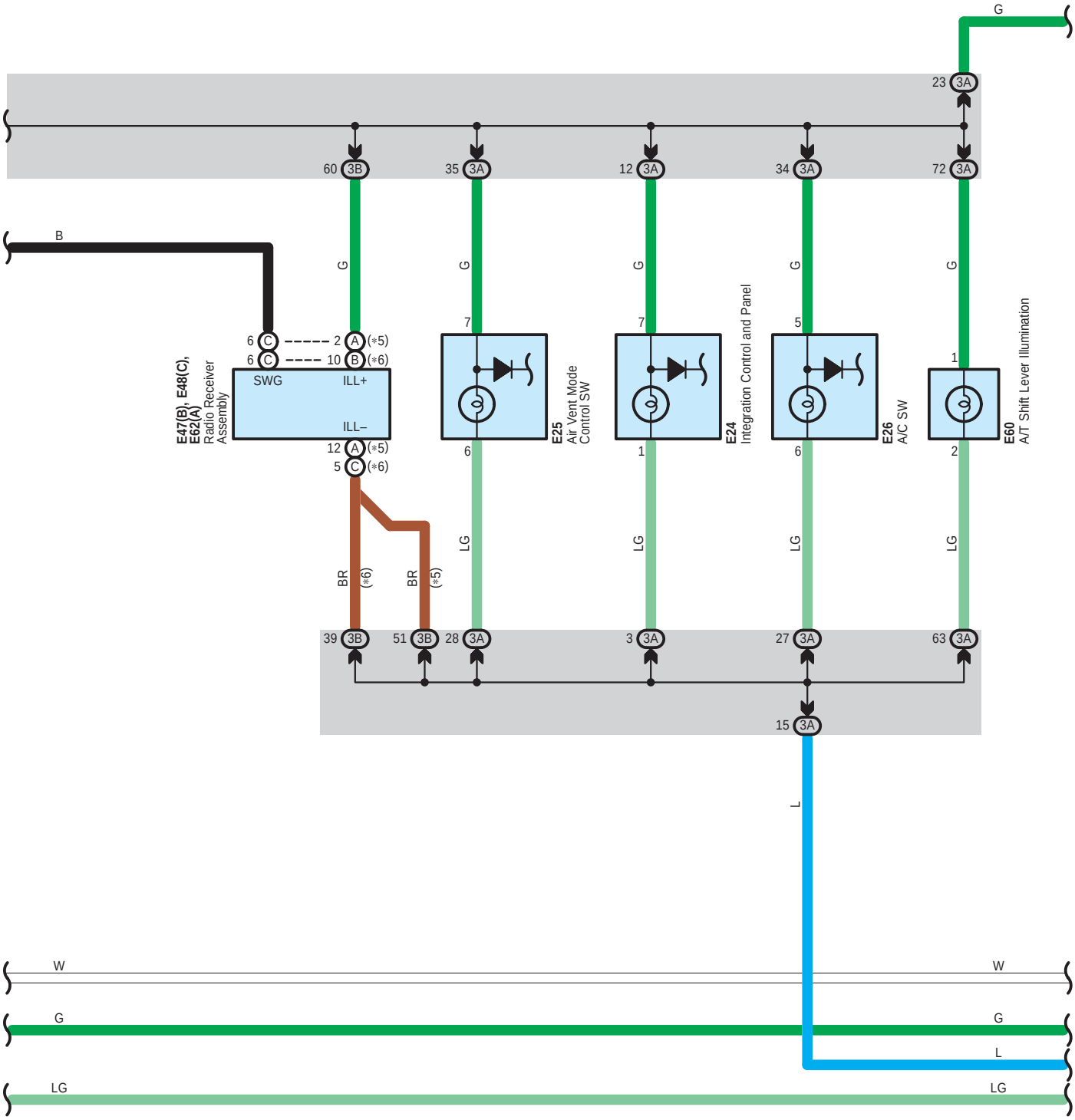

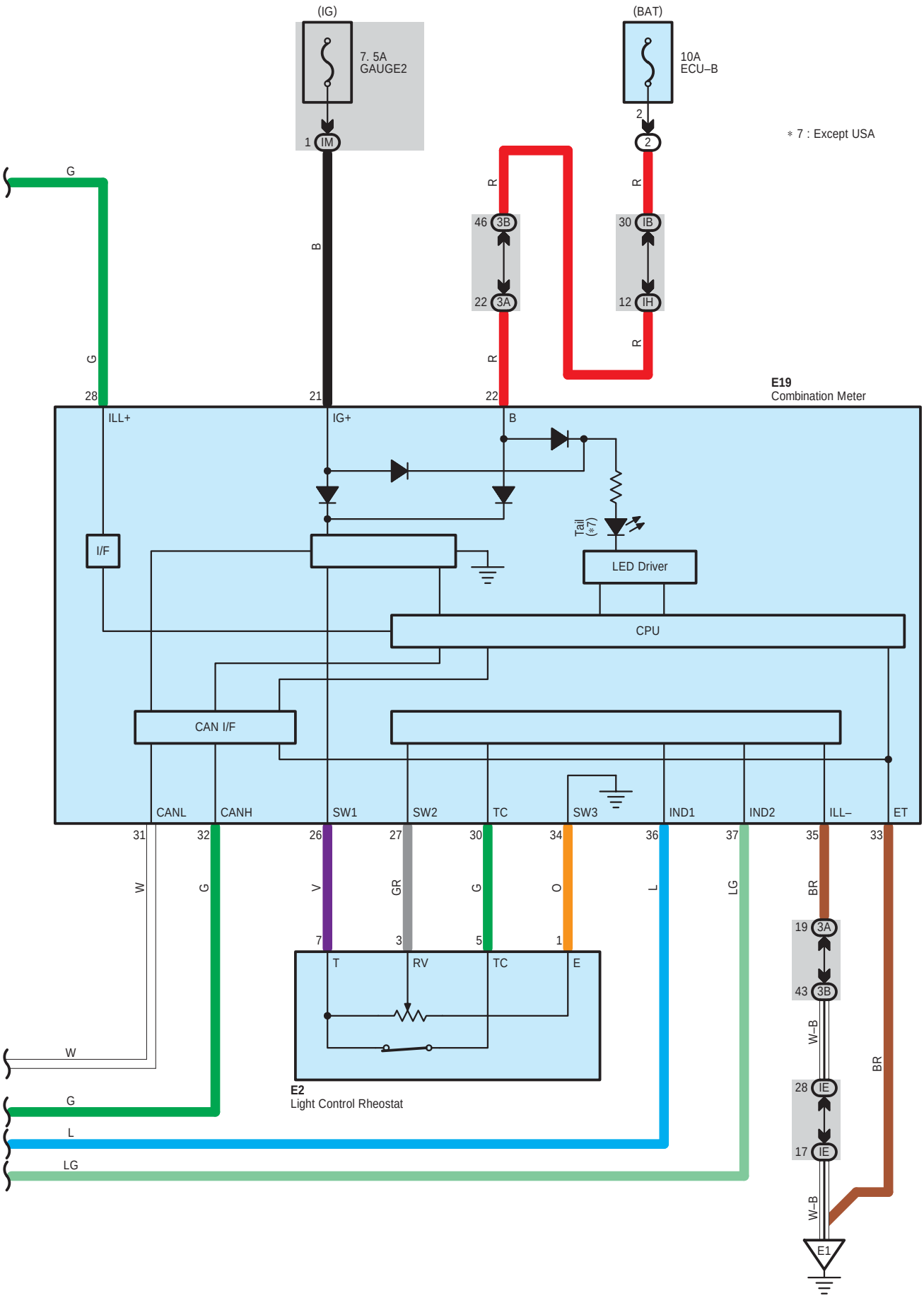
(IG)
7. 5A
GAUGE2
1 IM
(BAT)
10A
ECU–B
2
2
∗ 7 : Except USA
G
B
R
46 3B
22 3A
30 IB
12 IH
R
G
28
21
22
E19
Combination Meter
ILL+
IG+
B
Tail
(∗7)
I/F
LED Driver
CPU
CAN I/F
CANL
CANH
SW1
SW2
TC
SW3
IND1
IND2
ILL–
ET
31
32
26
27
30
34
36
37
35
33
W
G
V
GR
G
O
L
LG
BR
7
3
5
1
T
RV
TC
E
E2
Light Control Rheostat
19 3A
43 3B
W–B
28 IE
17 IE
W–B
BR
E1
W
G
L
LG

○ : Parts Location

Code	See Page	Code	See Page	Code	See Page
A12	50 (2GR–FE)	E20	54	E50	55
	52 (2AZ–FE)	E22	54	E51	55
A24	50 (2GR–FE)	E23	54	E60	55
	52 (2AZ–FE)	E24	54	E62 A	55
A37	56	E25	54	E68	55
E1	54	E26	54	E69	55
E2	54	E27	54	E70	55
E7	54	E28	54	K12	59
E12	54	E29	54	K14	59
E15 A	54	E31	54	K20	59
E17 C	54	E47 B	55	Q6	61
E19	54	E48 C	55		

: Relay Blocks

Code	See Page	Relay Blocks (Relay Block Location)
1	22 (2GR–FE)	Engine Room R/B No.1 (Engine Compartment Left)
	23 (2AZ–FE)	
2	26 (2GR–FE)	Engine Room R/B No.2 (Engine Compartment Right)
	27 (2AZ–FE)	

: Junction Block and Wire Harness Connector

Code	See Page	Junction Block and Wire Harness (Connector Location)
3A	38	Instrument Panel Wire and J/B No.3 (Instrument Panel Center)
3B		
4A	44	Instrument Panel Wire and J/B No.4 (Instrument Panel Center)
4B		
IA	30	Floor Wire and Instrument Panel J/B (Cowl Side Left)
IB	30	Engine Room Main Wire and Instrument Panel J/B (Cowl Side Left)
IE	30	Instrument Panel Wire and Instrument Panel J/B (Cowl Side Left)
IG	30	Engine Room Main Wire and Instrument Panel J/B (Cowl Side Left)
IH	30	Instrument Panel Wire and Instrument Panel J/B (Cowl Side Left)
IM	31	
IQ		

: Connector Joining Wire Harness and Wire Harness

Code	See Page	Joining Wire Harness and Wire Harness (Connector Location)
QK1	67	Back Door No.1 Wire and Floor Wire (Right Rear Quarter Panel)

: Ground Points

Code	See Page	Ground Points Location
A1	64 (2GR–FE)	Front Left Fender
	65 (2AZ–FE)	
A3	64 (2GR–FE)	Front Right Fender
	65 (2AZ–FE)	
E1	66	Left Kick Panel
E3	66	Instrument Panel Reinforcement Center
K2	67	Left Quarter Panel
Q1	67	Left Side of the Back Door